BGE27 and BGE27AG

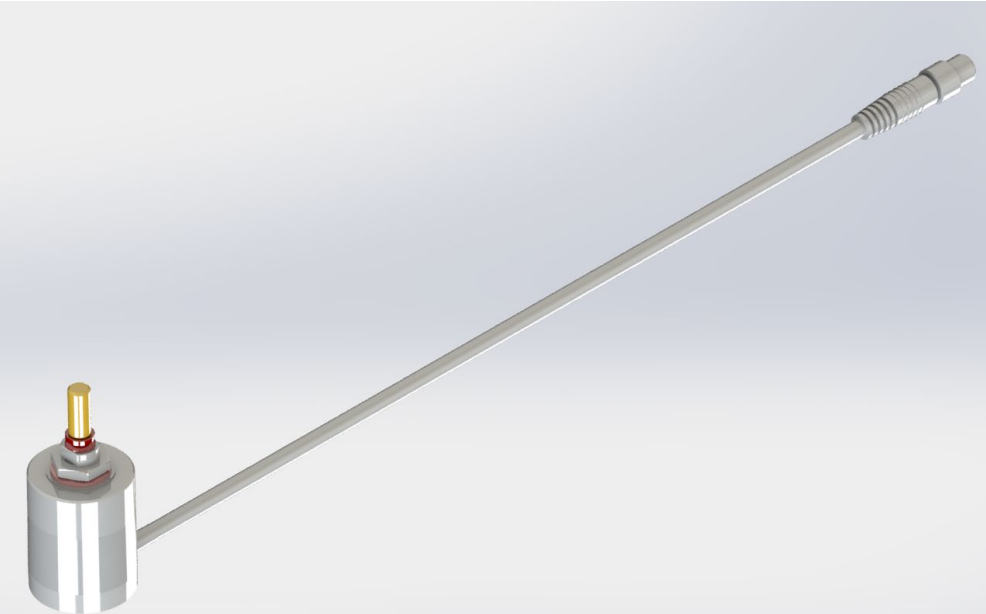

DESCRIPTION

Magnetic rotary pulse encoder without detent and rest for applications in extreme conditions. BGE27 and BGE27AG come with a long durability due to double ball bearing shaft, IP65 protection class with a completely enclosed housing and a wear-free signal generation due to HALL effect sensors.

Available in two versions, one with quadrature signals (AB track signals) with open collector output for direct connection to SPS control units – also for small switching loads.

The second version (BGE27AG) comes with a short circuit proof 0 to 10V output signal for direct connection to SPS control units. The BGE27AG is a direct substitute for 10k multi-turn potentiometer (current consumption <10 mA).

EBE Elektro-Bau-Elemente GmbH
Sielminger Straße 63
70771 Leinfelden-Echterdingen

TECHNICAL DATA

CONSTRUCTION AND MECHANICAL DATA

DETENT ANGLE	n.a.
DETENT GRADUATION	n.a.
MOUNTING	central mounting
PROTECTION CLASS	IP65
DETENT MECHANISM	magnetic
DETENT TORQUE WITH INDEX	n.a.
BEARING	double ball bearing
ACTIVATING BUTTON	n.a.
ACTUATING PATH	n.a.
FASTENING TORQUE MAX.	tbd.
MAX. LOAD ON SHAFT	axial: tbd. radial: tbd.
LIFE EXPECTANCY	> 30 x 10^6 turns
REVOLUTION SPEED MAX.	1.000 rpm
SHAFT LENGHT	customizable
SHAFT DESIGN	customizable
PUSHBUTTON / SWITCHING FUNCTION	n.a.
DETENT ANGLE	n.a.

ELECTRICAL DATA

OPERATION VOLTAGE BGE27	5 VDC ± 10%
OPERATION VOLTAGE BGE27AG	10 VDC ±0.1V (no inverse polarity protection)
CURRENT CONSUMPTION	< 20 mA
INDICATOR OF REVOLUTION DIRECTION	BGE27: A/B signal BGE27AG: CW 10 V -> 0 V (view on shaft)
OUTPUT SIGNAL BGE27	open collector max. 30 V, short-circuit proof low < 0,5 V with max. 5 mA per output
OUTPUT SIGNAL BGE27AG	0.2 to 9.8 V @ 100 kΩ (short circuit proof); 10 revolutions with 1V per revolution and 2.8° angle resolution last value is restored after a power failure lower limit < 0,3V upper limit > 9,7V linearity ±0.02V
IMPULSES PER OUTPUT BGE27	32
CONNECTOR	BGE27: AMP Mini Mate-N-Lok 4-pol. BGE27AG: M8x1, 3-pol.

EBE Elektro-Bau-Elemente GmbH
Sielminger Straße 63
70771 Leinfelden-Echterdingen

ELECTRICAL DATA	
OPERATING TEMPERATURE	-20°C to +70°C
STORAGE TEMPERATURE	-40°C to +125°C

DRAWINGS / OTHER INFORMATION

PINOUT – BGE27 WITH A/B LINE SIGNAL

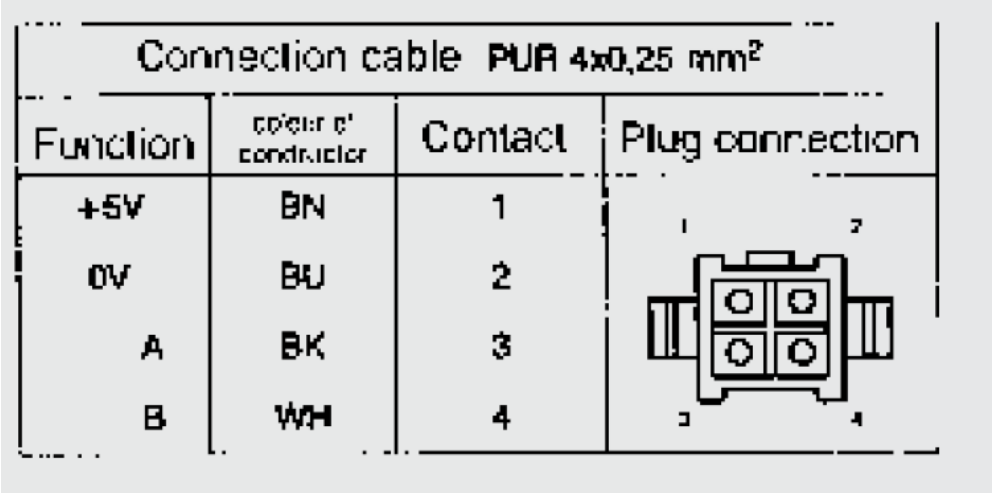

PINOUT – VERSION BGE27AG ABSOLUTE ENCODER

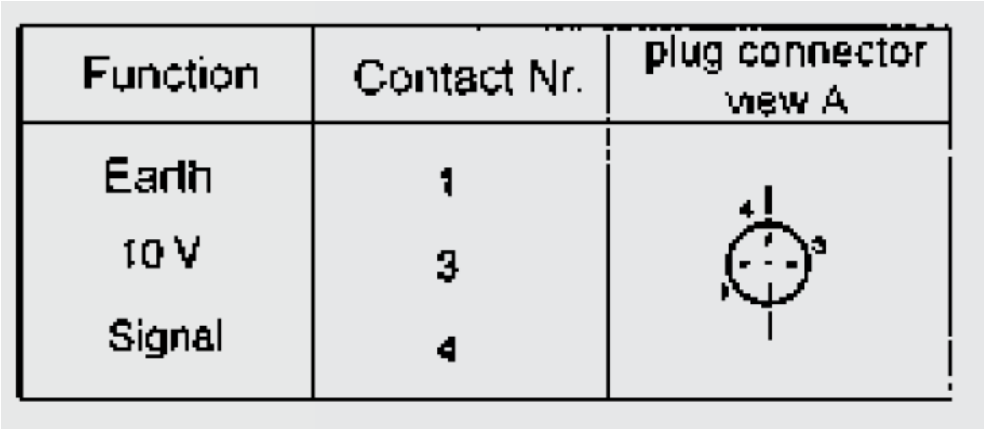

EBE Elektro-Bau-Elemente GmbH
Sielminger Straße 63
70771 Leinfelden-Echterdingen

SAMPLE DRAWING BGE27 and BGE27AG

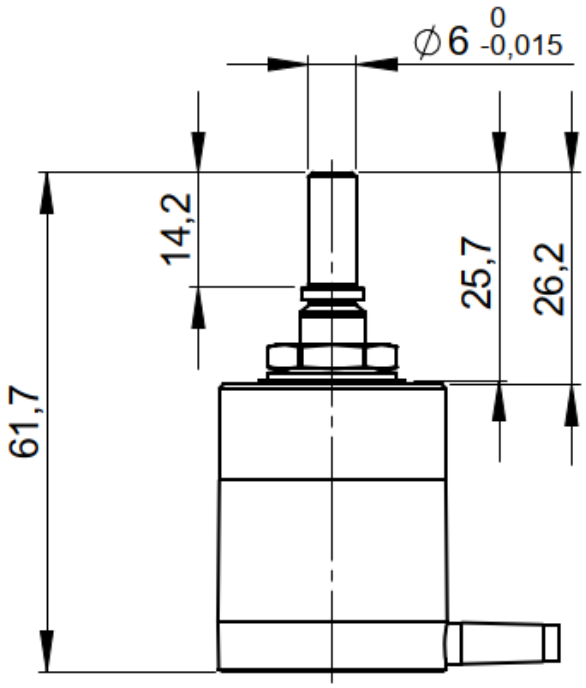

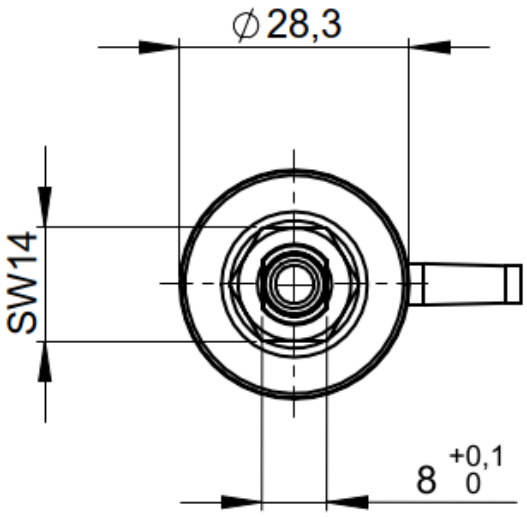

units in mm

EBE Elektro-Bau-Elemente GmbH
Sielminger Straße 63
70771 Leinfelden-Echterdingen

VERSION BGE27 WITH A/B LINE SIGNAL

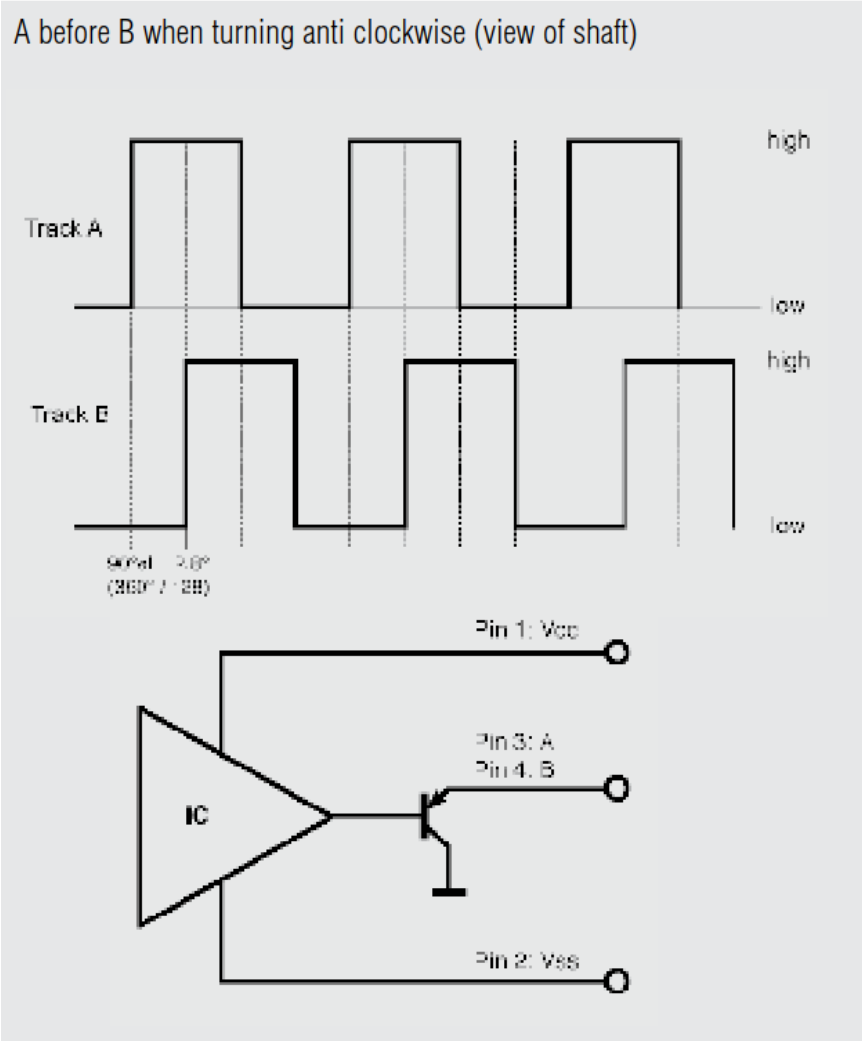

EBE Elektro-Bau-Elemente GmbH
Sielminger Straße 63
70771 Leinfelden-Echterdingen

VERSION BGE27AG ABSOLUTE ENCODER

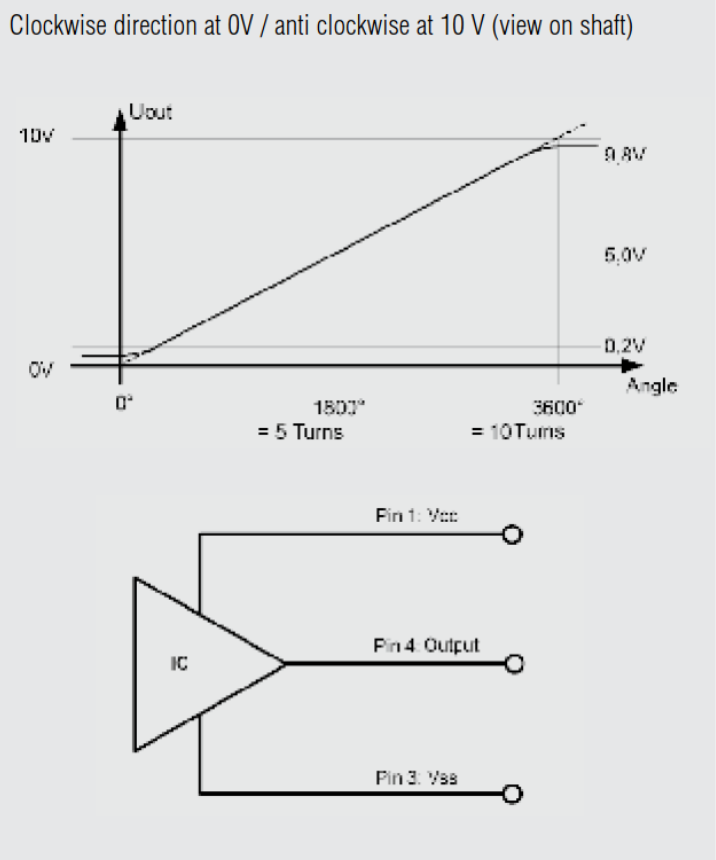

SAFETY AND WARNING NOTES

The components are solely for use by technically qualified, professional electronics experts who are familiar to the dangers and application risks associated with handling electrical mechanical components, systems and subsystems. User assumes all responsibility and liability for proper and safe handling and use and agrees with the restrictions and disclaimer at the end of this document.

EBE Elektro-Bau-Elemente GmbH
Sielminger Straße 63
70771 Leinfelden-Echterdingen

DISCLAIMER

The information contained in this document is for general guidance only. The user is responsible for determining the suitability of the technical information referred herein for his application. On delivery of the component, EBE is only obliged to implement those properties set out and agreed upon in this document. Further properties are not included. No guarantee is given. The component has been designed for installation in our customer's products. Manufacturer of the resulting product and consequent liability according to the Product Liability Act lies with the customer. Warranty is limited to below mentioned extent.

The component is not intended for installation in end products for medical, life-saving, or safety-related applications. The use of the component is also not permitted and expressly prohibited in vehicles of any kind (including trailers and watercraft), as a component in aerospace products (including radio transmitter for aerospace purposes), or in offshore structures.

User assumes all responsibility and liability to determine whether the component is subject to any applicable international, federal, state, or local laws and regulations related to user's handling and use of the component and, if applicable, user assumes all responsibility and liability for compliance in all respects with such laws and regulations.

Disclaimer for improper use
The manufacturer accepts no liability for damage resulting from improper, inappropriate, or non-compliant use of the component. Any liability for direct or indirect damage, consequential damage or loss resulting from improper use is excluded. The Customer (user) is obliged to use the component exclusively in accordance with the instructions and information given in this document.

The limitation of liability described above does not apply in the case of mandatory statutory liability such as under the German Product Liability Act (Produkthaftungsgesetz) or in the case that a guarantee is given or in the case of willful deceit or fraudulent misrepresentation or with regard to claims for an injury of the life or limb or health or in the case of intentional or grossly negligent breach of fundamental contractual duties (“wesentliche Vertragspflichten”).

REVISION

REVISION	DATE	DESCRIPTION
1.0	05.05.2026	Update legal notices
0.9	06.12.2022	DRAFT Initial Data Sheet BGE27 and BGE27AG

EBE Elektro-Bau-Elemente GmbH
Sielminger Straße 63
70771 Leinfelden-Echterdingen