MPE19 electronic Potentiometer 01 Detent
Part No. 4843522038-00

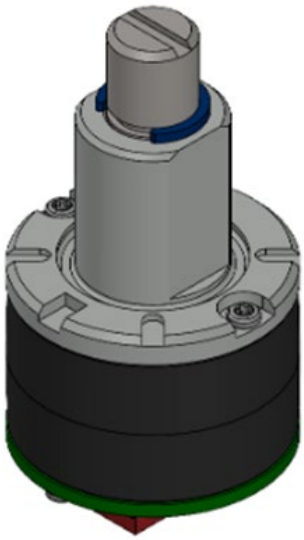

DESCRIPTION

Electronic rotary potentiometer with wear-free HALL-sensing module for signal generation. Digit-exact fine adjustment through precise mechanical detent and stops with high rotational life. Perfect for use in industrial environments.

EBE Elektro-Bau-Elemente GmbH
Sielminger Straße 63
70771 Leinfelden-Echterdingen

TECHNICAL DATA

CONSTRUCTION AND MECHANICAL DATA (TYPICAL VALUES, T=23 °C)

MECHANICAL ROTATION ANGLE	300°
DETENT ANGLE MECHANICAL	185° +/-5°
DETENT GRADUATION	1
MOUNTING	central mounting
PROTECTION CLASS	IP65 to the frontside between bushing and shaft
DETENT MECHANISM	mechanic
ADJUSTMENT TORQUE	1 – 2 Ncm
DETENT TORQUE WITH INDEX	< 5 Ncm
BEARING	friction
STOP STRENGTH MIN.	> 0,7 Nm
FASTENING TORQUE MAX.	2,0 Nm
LIFE EXPECTANCY (TYPICAL)	1.000.000 cycles
SHAFT LENGTH AND DESIGN	acc. drawing (customizable)
MOUNTING MATERIAL INCLUDED	wave spring washer nut M10x0,75

ELECTRICAL DATA (TYPICAL VALUES, T=23 °C)

OPERATION VOLTAGE	5 VDC ± 10 %
CURRENT CONSUMPTION	5 mA typ., max. 7,5 mA
OUTPUT SIGNAL	0V - VCC ±10 %
MIN. RESISTIVE OUTPUT LOAD (CONT.)	100 kΩ
MAX. CAPACITIVE OUTPUT LOAD	1 nF
INDICATOR OF REVOLUTION DIRECTION	voltage rising linear clockwise
ELECTRICAL DETENT	acc. output signal drawing
TOLERANCE OUTPUT VOLTAGE TO MECHANICAL GRADUATION	+/-2%
INSULATION RESISTANCE	>10 MOhm at 500 V DC
DIELECTRIC STRENGTH	500 V DC
CONNECTOR	MicroMatch (TE 7-188275-4) or similar

EBE Elektro-Bau-Elemente GmbH
Sielminger Straße 63
70771 Leinfelden-Echterdingen

ENVIRONMENTAL CONDITIONS

OPERATING TEMPERATURE	-10°C to +60°C (others on request possible)
STORAGE TEMPERATURE	-30°C to +85°C
HUMIDITY	20% to 75% r.H. not condensing
REACH AND ROHS	conform

PINOUT AND DRAWINGS

PINOUT AND DESCRIPTION

PIN	SIGNAL	DESCRIPTION
1	GND	Power supply ground
2	Signal Output	Potentiometer analog output signal
3	VCC	Positive power supply
4	n.c.	Do not connect

Voltage levels for power supply and encoder output voltage are defined in table electrical data.

EBE Elektro-Bau-Elemente GmbH
Sielminger Straße 63
70771 Leinfelden-Echterdingen

OUTLINE DRAWING

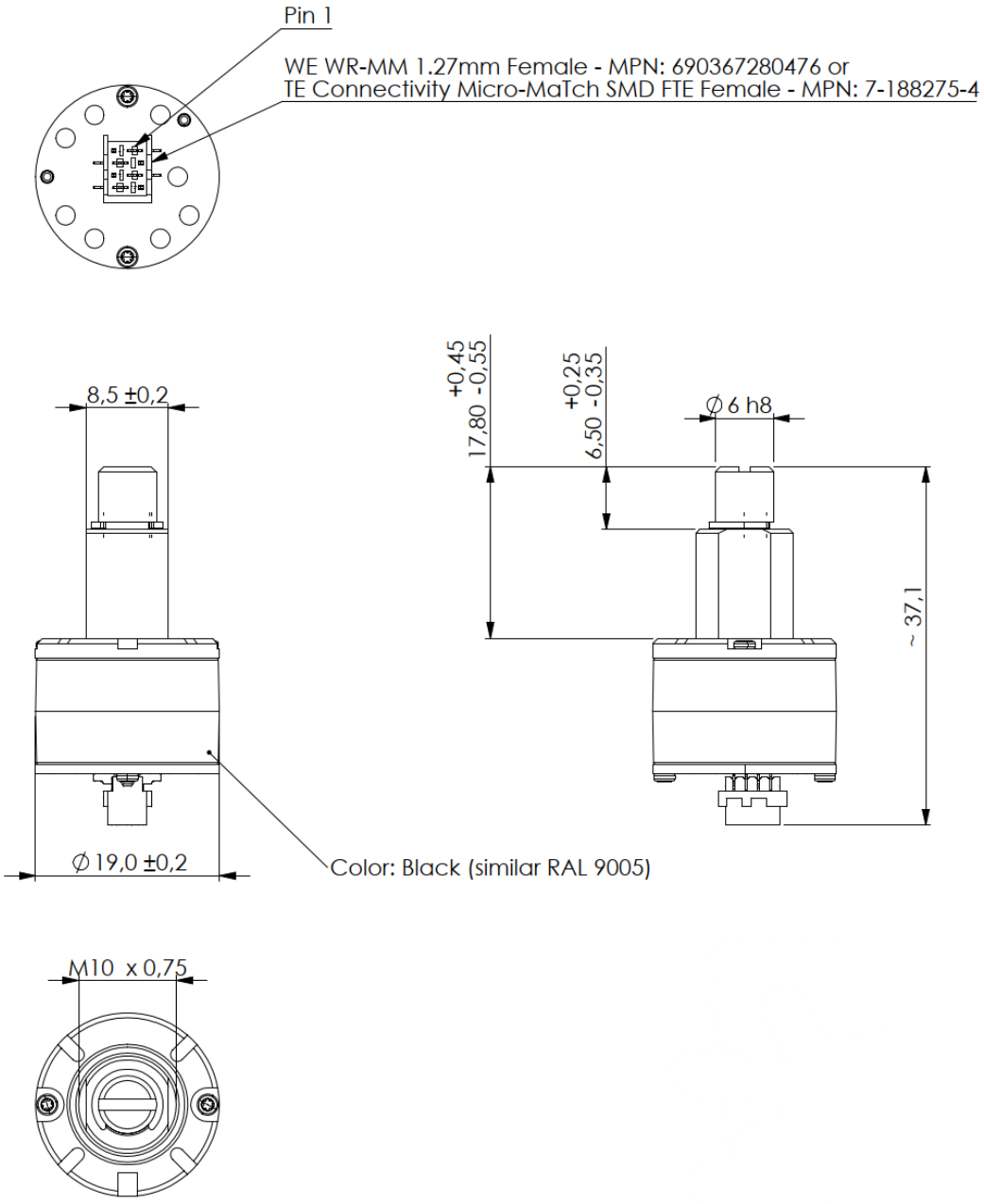

Units in mm

EBE Elektro-Bau-Elemente GmbH
Sielminger Straße 63
70771 Leinfelden-Echterdingen

OUTPUT SIGNAL REVOLUTION CW

The analog output value depends on the angle of the potentiometer axis, having a linear function between 16 and 284 degrees.

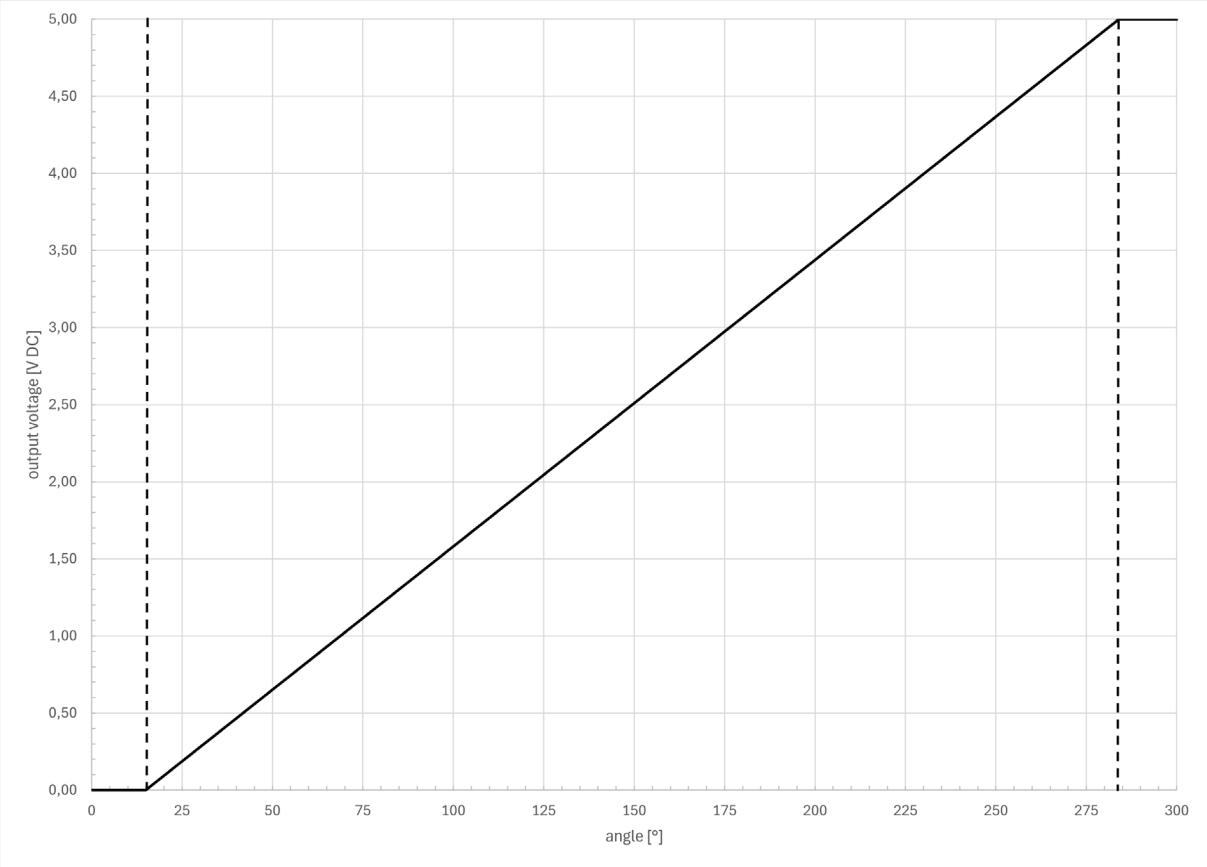

Output voltage level can be calculated by using this equation between 16 and 284 degrees:

$$output\ voltage\ [V] = 0{,}0171 * angle$$

Output voltages lower than 16 degrees or higher than 284 degrees are mapped to ground or VCC.

SAFETY AND WARNING NOTES

The components are solely for use by technically qualified, professional electronics experts who are familiar to the dangers and application risks associated with handling electrical mechanical components, systems and subsystems. User assumes all responsibility and liability for proper and safe handling and use and agrees with the restrictions and disclaimer at the end of this document.

EBE Elektro-Bau-Elemente GmbH
Sielminger Straße 63
70771 Leinfelden-Echterdingen

DISCLAIMER

The information contained in this document is for general guidance only. The user is responsible for determining the suitability of the technical information referred herein for his application. On delivery of the component, EBE is only obliged to implement those properties set out and agreed upon in this document. Further properties are not included. No guarantee is given. The component has been designed for installation in our customer's products. Manufacturer of the resulting product and consequent liability according to the Product Liability Act lies with the customer. Warranty is limited to below mentioned extent.

The component is not intended for installation in end products for medical, life-saving, or safety-related applications. The use of the component is also not permitted and expressly prohibited in vehicles of any kind (including trailers and watercraft), as a component in aerospace products (including radio transmitter for aerospace purposes), or in offshore structures.

User assumes all responsibility and liability to determine whether the component is subject to any applicable international, federal, state, or local laws and regulations related to user's handling and use of the component and, if applicable, user assumes all responsibility and liability for compliance in all respects with such laws and regulations.

Disclaimer for improper use

The manufacturer accepts no liability for damage resulting from improper, inappropriate, or non-compliant use of the component. Any liability for direct or indirect damage, consequential damage or loss resulting from improper use is excluded. The Customer (user) is obliged to use the component exclusively in accordance with the instructions and information given in this document.

The limitation of liability described above does not apply in the case of mandatory statutory liability such as under the German Product Liability Act (Produkthaftungsgesetz) or in the case that a guarantee is given or in the case of willful deceit or fraudulent misrepresentation or with regard to claims for an injury of the life or limb or health or in the case of intentional or grossly negligent breach of fundamental contractual duties (“wesentliche Vertragspflichten”).

REVISION

REVISION	DATE	DESCRIPTION
1.1	07.05.2026	Update legal notices
1.0	08.04.2025	Initial release

EBE Elektro-Bau-Elemente GmbH
Sielminger Straße 63
70771 Leinfelden-Echterdingen