SB12_SB14 – HMI-Switches

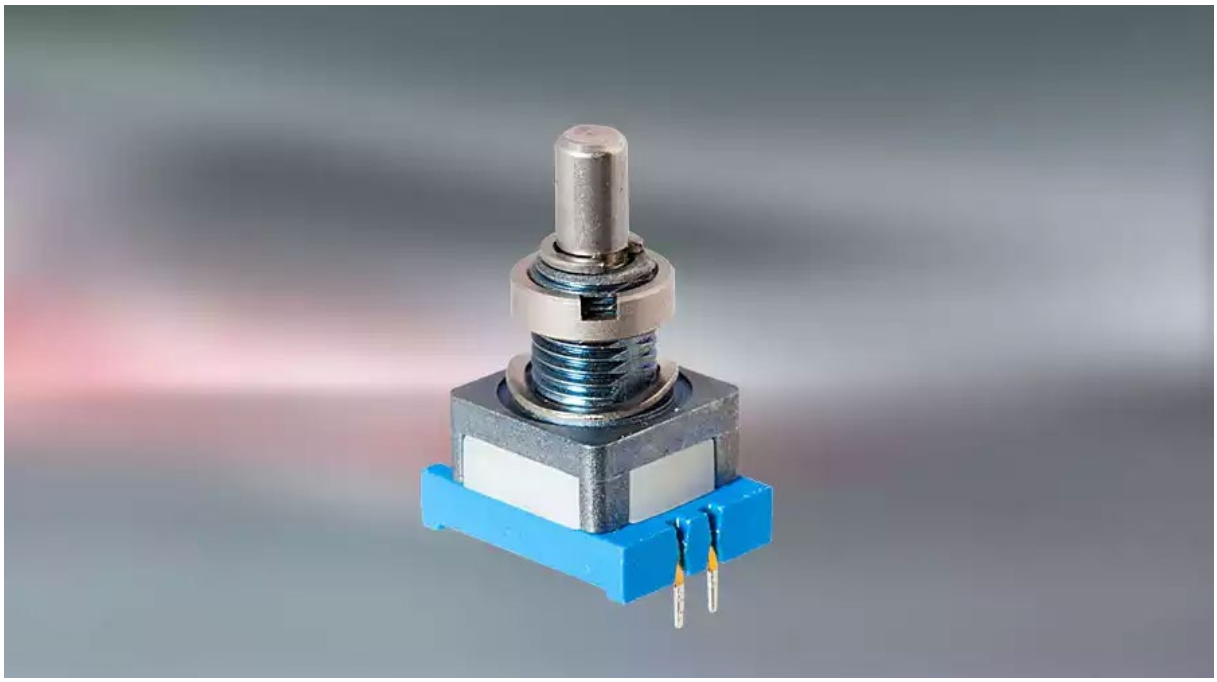

DESCRIPTION

This miniature switch has vast possibilities and variations.

- Two different grids:
  2,54 mm according to the international standard (1/10 inch) or 2,0 mm for minimum space requirements of PC board (SBL12 only).
- Fixing with additional non-turn protection frame (SBL12 only).

Switch SBK12

- Plastic detent mechanism and wafers with epoxide-glass laminate.
  Special designs:
- watertight against front panel.
- Soldering pin bar as distance keeper to prevent short-circuits, when conducting run paths below the switch.
- wafers with special applications.

EBE Elektro-Bau-Elemente GmbH
Sielminger Straße 63
70771 Leinfelden-Echterdingen

Switch SBL12

- Plastic detent mechanism with moulding wafers made of thermoplastics.
- Connection pins and contacts made of one piece for safe soldering even under adverse conditions.
- Special designs available on request.

Switch SBIV14

- Impulse contact, e. g. for battery test or as call contact.
- Locking possibility for free selectable switch positions, i.e. the switch can only be brought into a locked switch position if pressure is applied to the axes.
- Watertight as special design.

TECHNICAL DATA

CONSTRUCTION AND MECHANICAL DATA , TYPICAL VALUES (T=23°C)	
NUMBER OF WAFERS MAX.	1 wafer
SWITCHING COMBINATIONS PER WAFER	—
SBK12 DESIGN B, DETENT ANGLE 60°	1x6 to 1x2; 2x6 to 2x2; module grid 2.54 mm
SBK12 DESIGN E, DETENT ANGLE 30°	1x12 to 1x2; 2x6 to 2x2; module grid 2.54 mm
SBL12 DESIGN D, DETENT ANGLE 36°	1x10 to 1x2; 2x5 to 2x2; module grid 2.0 or 2.54 mm
SBIV14 DESIGN D, DETENT ANGLE 36°	See drawing for SBIV14 below
CONTACTS	Soldering pins
MOUNTING	Central mounting
MODE OF SWITCHING	Shorting or non-shorting
STOPS	Fixed or without stop
OPERATING TORQUE	3 to 8 Ncm (depends on design)
DUST PROTECTION	Sealed wafers
CONTACT MATERIAL WAFER	Au with Ni insulating layer
CONTACT MATERIAL BRIDGE	Ag; Au as special design
INSULATING MATERIAL WAFER SBK12/SBIV14	Epoxide glass laminate; Code EP
INSULATING MATERIAL WAFER SBL12	Polybutylenterephthalate PBTP; Code PB
INSULATING MATERIAL ROTOR	Thermoplastic

EBE Elektro-Bau-Elemente GmbH
Sielminger Straße 63
70771 Leinfelden-Echterdingen

ELECTRICAL DATA, TYPICAL VALUES (T=23°C)

SWITCHING POWER MAX.	1.5 VA/W
SWITCHING CURRENT MAX.	50 mA
REST CURRENT MAX. AT 20°C	0.5 A
CONTACT RESISTANCE INITIAL VALUE	<=60 mΩ
INSULATION RESISTANCE	>=10^10 Ω

EBE Elektro-Bau-Elemente GmbH
Sielminger Straße 63
70771 Leinfelden-Echterdingen

DIMENSIONS

The bold-typed data in the yellow order blocks remain unchanged.
Normal-typed data matches the drawings and can be modified according to your wishes.
Blanks need to be completed according to the ordering details on the inside front cover.

Dimensional Drawings · Dimensions in mm

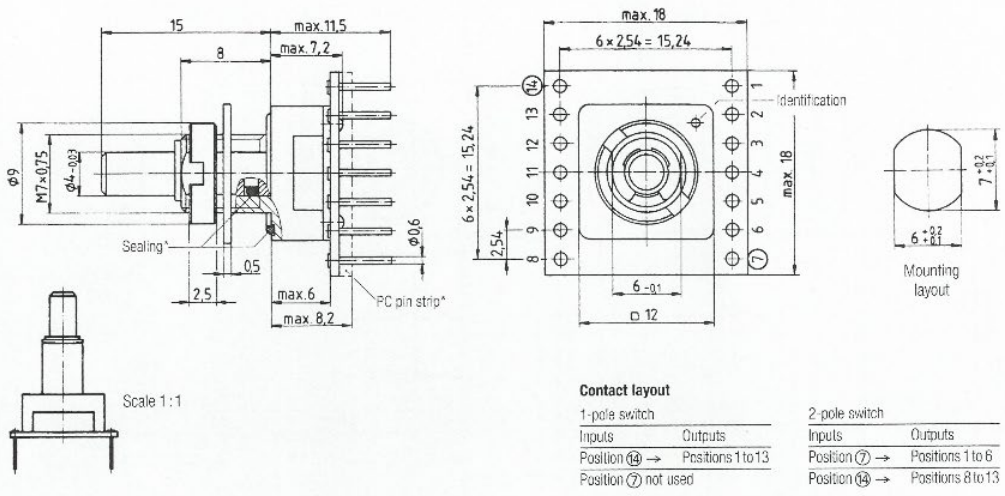

Contact layout

1-pole switch		2-pole switch	
Inputs	Outputs	Inputs	Outputs
Position ⑭ →	Positions 1 to 13	Position ⑦ →	Positions 1 to 6
Position ⑦ not used		Position ⑭ →	Positions 8 to 13

* Special type

SBK 12 - 1 - 2 - E 3 - 15 4 - A 5 - 6 - 7 - EP 8 - 9 - 1 10 - P 11 - 12 - 13 - 2,54 14

SBK 12 · Detent angle 30°, pin module grid 2,54 mm

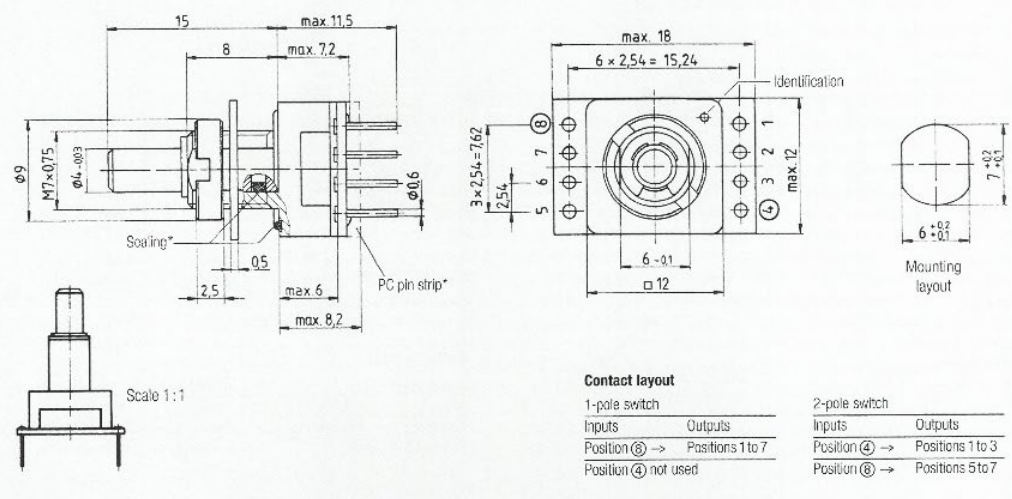

Contact layout

1-pole switch		2-pole switch	
Inputs	Outputs	Inputs	Outputs
Position ⑧ →	Positions 1 to 7	Position ④ →	Positions 1 to 3
Position ④ not used		Position ⑧ →	Positions 5 to 7

* Special type

SBK 12 - 1 - 2 - B 3 - 15 4 - A 5 - 6 - 7 - EP 8 - 9 - 1 10 - P 11 - 12 - 13 - 2,54 14

SBK 12 · Detent angle 60°, pin module grid 2,54 mm

The bold-typed data in the yellow order blocks remain unchanged.
Normal-typed data matches the drawings and can be modified according to your wishes.
Blanks need to be completed according to the ordering details on the inside front cover.

Dimensional Drawings · Dimensions in mm

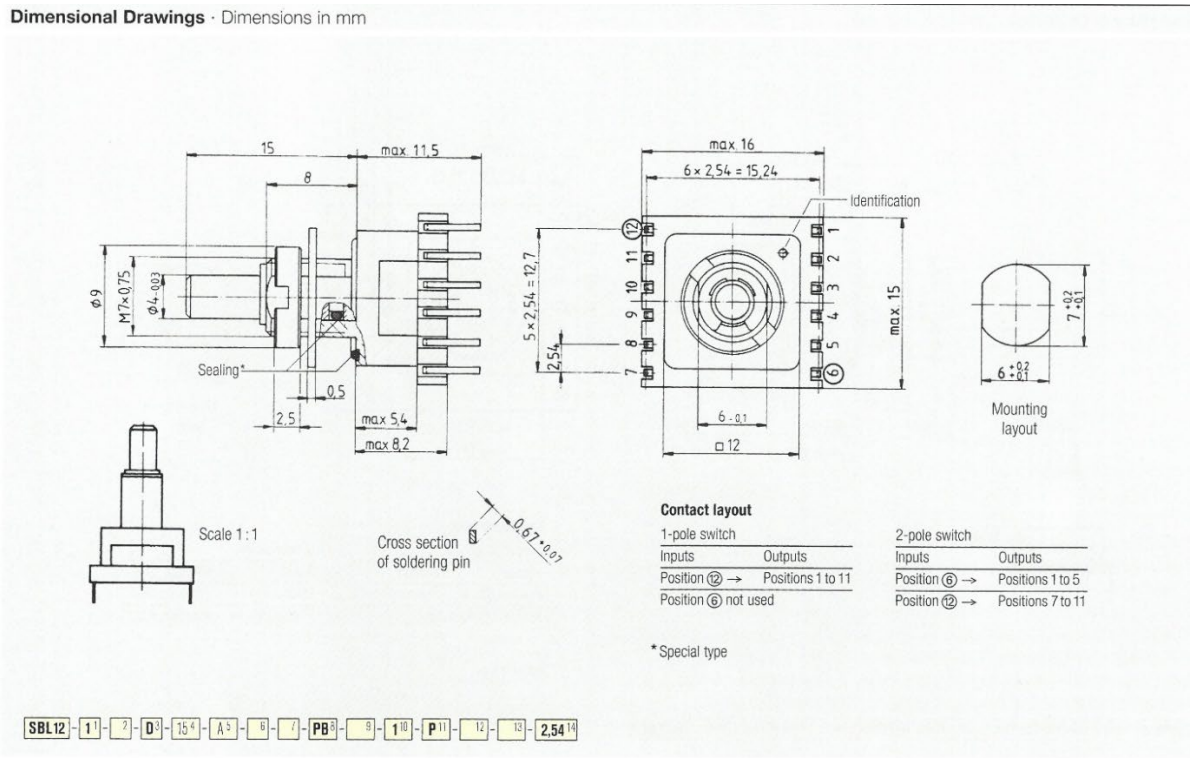

SBL12 · Detent angle 36°, pin module grid 2,54 mm

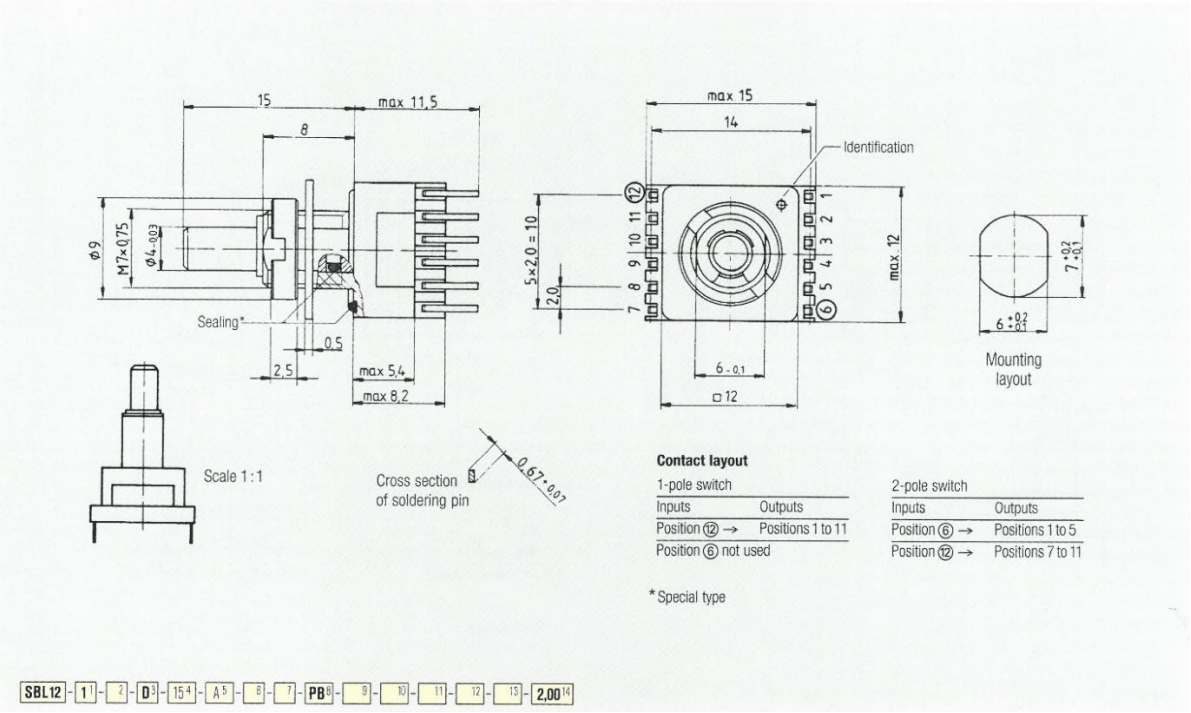

EBE Elektro-Bau-Elemente GmbH
Sielminger Straße 63
70771 Leinfelden-Echterdingen

Dimensional Drawings · Dimensions in mm

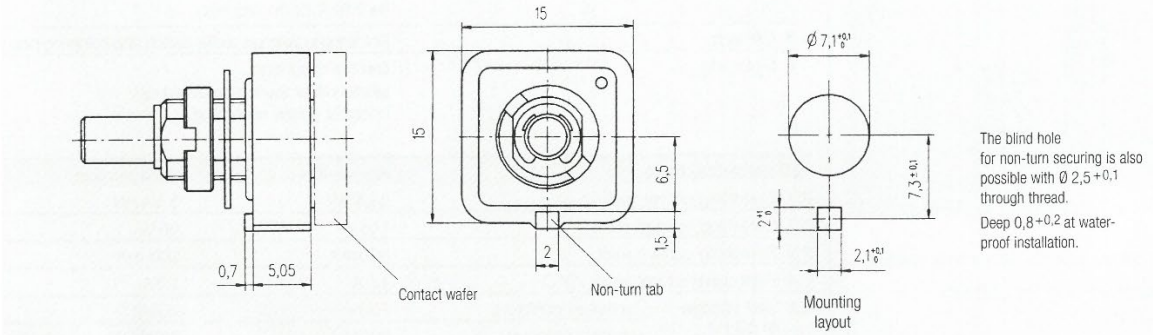

Ordering no. for non-turn protection frame 32411-59195

SBL12 with non-turn protection frame

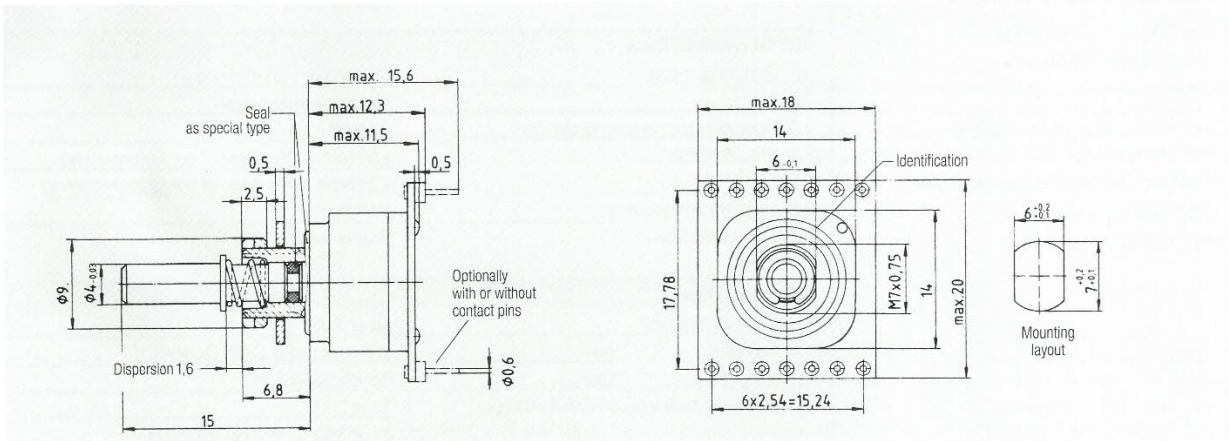

Construction SB IV 14

Design D, detent angle 36°	1 x 9 to 1 x 2; 2 x 5 to 2 x 2. Module grid 2,54 mm
1 circuit, 2 to 5 positions	Interlocking and momentary contact possible in each position
1 circuit, 6 to 9 positions	Momentary contact possible, not interlockable
1 circuit, 10 positions, overflowable	Interlocking possible in each position. No momentary contact
2 circuits, 2 to 5 positions	Interlocking and momentary contact possible in each position

SBIV14 with impulse contact

EBE Elektro-Bau-Elemente GmbH
Sielminger Straße 63
70771 Leinfelden-Echterdingen

SAFETY AND WARNING NOTES

The components are solely for use by technically qualified, professional electronics experts who are familiar to the dangers and application risks associated with handling electrical mechanical components, systems and subsystems. User assumes all responsibility and liability for proper and safe handling and use and agrees with the restrictions and disclaimer at the end of this document.

DISCLAIMER

The information contained in this document is for general guidance only. The user is responsible for determining the suitability of the technical information referred herein for his application. On delivery of the component, EBE is only obliged to implement those properties set out and agreed upon in this document. Further properties are not included. No guarantee is given. The component has been designed for installation in our customer's products. Manufacturer of the resulting product and consequent liability according to the Product Liability Act lies with the customer. Warranty is limited to below mentioned extent.

The component is not intended for installation in end products for medical, life-saving, or safety-related applications. The use of the component is also not permitted and expressly prohibited in vehicles of any kind (including trailers and watercraft), as a component in aerospace products (including radio transmitter for aerospace purposes), or in offshore structures.

User assumes all responsibility and liability to determine whether the component is subject to any applicable international, federal, state, or local laws and regulations related to user's handling and use of the component and, if applicable, user assumes all responsibility and liability for compliance in all respects with such laws and regulations.

Disclaimer for improper use

The manufacturer accepts no liability for damage resulting from improper, inappropriate, or non-compliant use of the component. Any liability for direct or indirect damage, consequential damage or loss resulting from improper use is excluded. The Customer (user) is obliged to use the component exclusively in accordance with the instructions and information given in this document.

The limitation of liability described above does not apply in the case of mandatory statutory liability such as under the German Product Liability Act (Produkthaftungsgesetz) or in the case that a guarantee is given or in the case of willful deceit or fraudulent misrepresentation or with regard to claims for an injury of the life or limb or health or in the case of intentional or grossly negligent breach of fundamental contractual duties (“wesentliche Vertragspflichten”).

REVISION

REVISION	DATE	DESCRIPTION
1.0	15.07.2026	Initial Data Sheet Short Version

EBE Elektro-Bau-Elemente GmbH
Sielminger Straße 63
70771 Leinfelden-Echterdingen